FORMULA SYSTEMS
TECHNICAL DATA SHEET

VISION PLUS - FZU 1442US01

formula
VISION PLUS™

SUMMARY

The new Vision Plus elevator door safety solution combines 2D and 3D technology in each edge to deliver highly intelligent door safety technology.

Each edge transmits and receives signals individually which makes detection ability much more concise. Being able to detect signals more accurately will significantly decrease the risk of no-detect when passengers approach from different angles and provides greater reliability when detecting multiple people within the landing area.

The protection zone, specifically designed for minimal protrusion into the landing, also assists in eliminating nuisance door reversal.

The Vision Plus total package comprises of a 2D/3D receiver, transmitter, optional universal interface power supply and comes as standard with universal mounting options. The simplicity of combined technology in less parts can have a significant impact on ease of installation and overall cost.

Vision Plus is certified by the Liftinstituut to ASME A17.1-2022 / CSA B44-22.

PRODUCT FEATURES

liftinstituut SINCE 1933 | 2D | 3D | DISTANCE | SELF TEST

CERTIFIED TO ASME A17.1-2022/B44-22
AND A17.1-2025/B44-25
US PATENT NO. 12,735,300

PRODUCT OVERVIEW

MODEL	VERSION	DIMENSIONS (MM)			RANGE (M)		MOUNTING		BEAMS	
		W	D	H	MIN	MAX	DOOR	TRACK	QTY	TOP
Vision Plus	FZU 1442	30	20	2136	0	1.8	YES	NO	42	1535

STANDARD CHARACTERISTICS

PRODUCT STANDARD CHARACTERISTICS (UNLESS OTHERWISE NOTED)	
Response time: <100ms	Light immunity: > 100,000 lux
Output: NPN	Indicators (LED): Red obstruction
Ingress protection: IP54	Temperature: Ambient -20°C to +70°C, Storage -40°C to +80°C
Operating voltage: 24V DC (18 - 30)	Material: Al, Alloy casing, plastic lens cover
Current Consumption: 90 mA Max RMS (65mA ECO mode)	Approvals & Certification: cULus, Liftinstituut, CE, UKCA

FORMULA-SYSTEMS.COM
SALES@FORMULA-SYSTEMS.COM

formula systems

FORMULA SYSTEMS
TECHNICAL DATA SHEET
VISION PLUS - FZU 1442US01

TECHNICAL SPECIFICATIONS

ITEM	DETAIL	COMMENTS
2D system	Generic offset beam technology	See Patents: EP1212506 GB2254916
Number of beams	42 non-focused beams	
Number of LEDs	21	
LED spacing	75mm	
3D System	3-dimensional detection	Switch selectable proximity sensor on both sides of the doors
Distance detection	Automatically recognises when the door has reached its fully open location	Self-test initiated at this point
Self-test	Performs a test of both 2D and 3D systems before door closing	When distance detection point has been reached self-test is performed
Response time	100 ms (nominal)	Relates to point of detection in scan cycle
2D range of detection	0 – 1800 mm	Dynamic installation only
Light immunity	100,000 lux	2D and 3D Feature
Angular displacement	10°	
Positional mounting tolerance (doors closed, units touching)	+/-10 mm vertically +/-10mm horizontally	
Power failure mode	Door signals defaults to open status	Cable disconnect or break
Operating voltage	24 volts (nominal) DC	18 volts min, 30 volts max DC
Current consumption	90 mA Max RMS 60 mA ECO mode	Total both units
Environmental protection	IP54	Conformal coated electronic components
Operating temperature range	-20°C to +70°C	
Storage temperature range	-40° to +80°C	
Unit size	20mm x 30mm x 2136mm	
Cable supplied	2 x 4.3m & 1 x 2m	
Case material	Aluminium Alloy	Extrusion, Black Anodised
Cover (filter)	Infra-red transparent plastic	Extruded PVC
Installation kit	Instructions Door Mount Brackets - Qty 10 Slam Mount Bracket - Qty 1 Cable Clips - Qty 10 Door Cable Retainer - Qty 2 Drill Bit 3.6mm - Qty 1	Installation kit is inclusive of screws fasteners etc.
Packaging	Tube 100mm diameter	
System markings	cULus, Liftinstituut, CE, UKCA	EN12015, EN12016

FORMULA-SYSTEMS.COM
SALES@FORMULA-SYSTEMS.COM

VISION PLUS - FZU 1442US01

PRODUCT OUTLINE

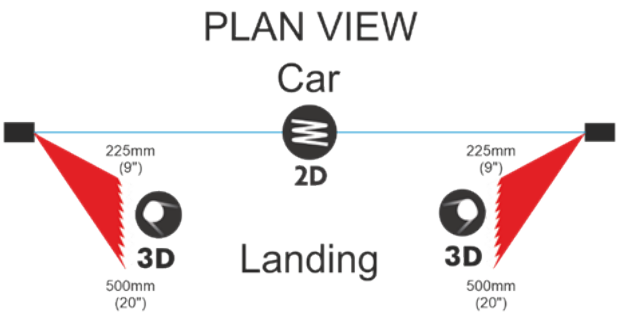

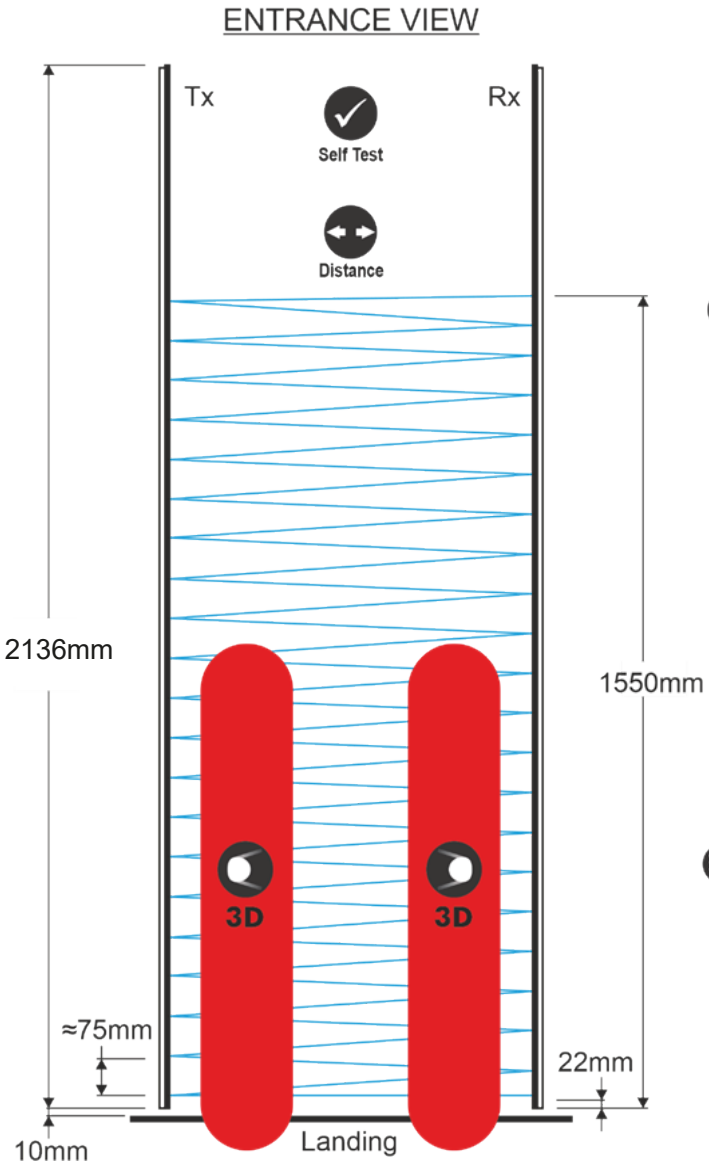

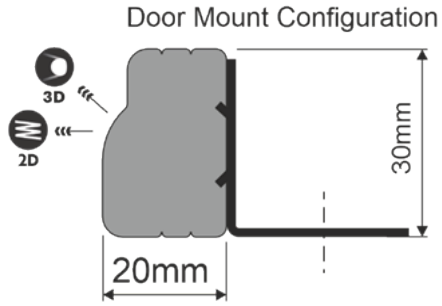

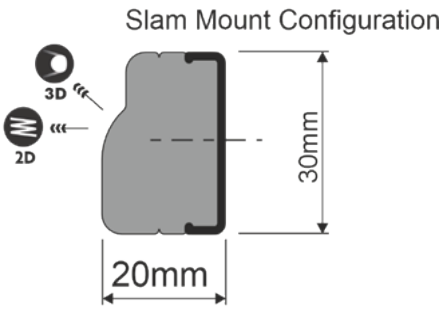

FORMULA SYSTEMS
TECHNICAL DATA SHEET
VISION PLUS - FZU 1442US01

CORE FEATURES

CERTIFIED TO ASME A17.1-2022/B44-22 AND A17.1-2025/B44-25

liftinstituut SINCE 1933 | 2D | 3D | DISTANCE | SELF TEST

3D
This is a forward-facing proximity sensor system; 3D has been optimized for both simplicity and effectiveness. 3D provides high-performance detection capability on both sides of the elevator door independently. Using a combination of 3D optical sensors on each edge side (Transmitter/Receiver), the 3D system optimizes target detection to meet the object size and color specified within the ASME code.

2D
Based around the Formula Systems 2D interleaved technology system, it comprises 22 sensors spaced at 75mm apart to allow the detection of all object sizes over the height requirements specified in the ASME code.

DOOR DISTANCE FULLY OPEN DETECTION
To meet the ASME code requirements, detection of when the door is fully open is required. The detection of this point is carried out using distance related to time. This will occur at 500mm and above.

SELF-TEST
On detection of the open door, the Vision Plus product will carry out a test on both 2D and 3D functions, reporting back if failure occurs through either the communication line on the unit or output drive.

CONNECTIVITY
As with previous Formula Systems products the Vision Plus product is a 'controller-less, direct-connect' design, suitable for direct integration with most door operators and controllers. (Depending on model)

Basic connectivity simply requires a suitable low voltage supply (18-30v DC) and produces an NPN (normally closed) control signal input switched to ground.

The Vision Plus product can be connected to existing Formula Systems FPS 0270-274 universal interfaces using the FEXT0032 / FEXT0048 making retrofitting to a FCU-0547 installation an easy installation upgrade step.

ECO-MODE
Formula Systems have incorporated a simple energy-saving feature in this 3D product range. By reducing the number of active beam paths when the doors are closed, power consumption is reduced by 30%. When the doors open, the system senses the change and returns the system to full detection capability.

FORMULA-SYSTEMS.COM
SALES@FORMULA-SYSTEMS.COM